Arm type Cable carrier FXYBx 2axes

Ordering method

FXYBx- C -A1-245- 55 -3L-RCX222- E - N - N1

Model – Cable – Combination – X-axis stroke – Y-axis stroke – Cable length – Controller – Usable for CE – Input/Output Selection 1 – Input/Output Selection 2

Combination: A1 to A4; X-axis stroke: 15 to 245; Y-axis stroke: 15 to 55; Cable length: 3L,5L, 10L

Note : For the details of the controller, please refer to the catalog of Yamaha Controllers.

Specification

	X-axis	Y-axis
Motor output	100W	100W
Repeatability Note 1	+/-0.04mm	+/-0.04mm
Drive system	Timing belt	Timing belt
Ball screw lead (Deceleration ratio)	Equivalent to lead 25mm	Equivalent to lead 25mm
Maximum speed	1875mm/sec	1875mm/sec
Moving range	150 to 2450mm	150 to 550mm
Robot cable length	Standard : 3.5m Option : 5m, 10m	
Controller	RCX222,RCX142,DRCX0505	

Note 1 : Repeatability for single oscillation.

Maximum load capacity

Y stroke	XY 2 axes
150mm	7kg
250mm	6kg
350mm	5kg
450mm	5kg
550mm	3kg

A1

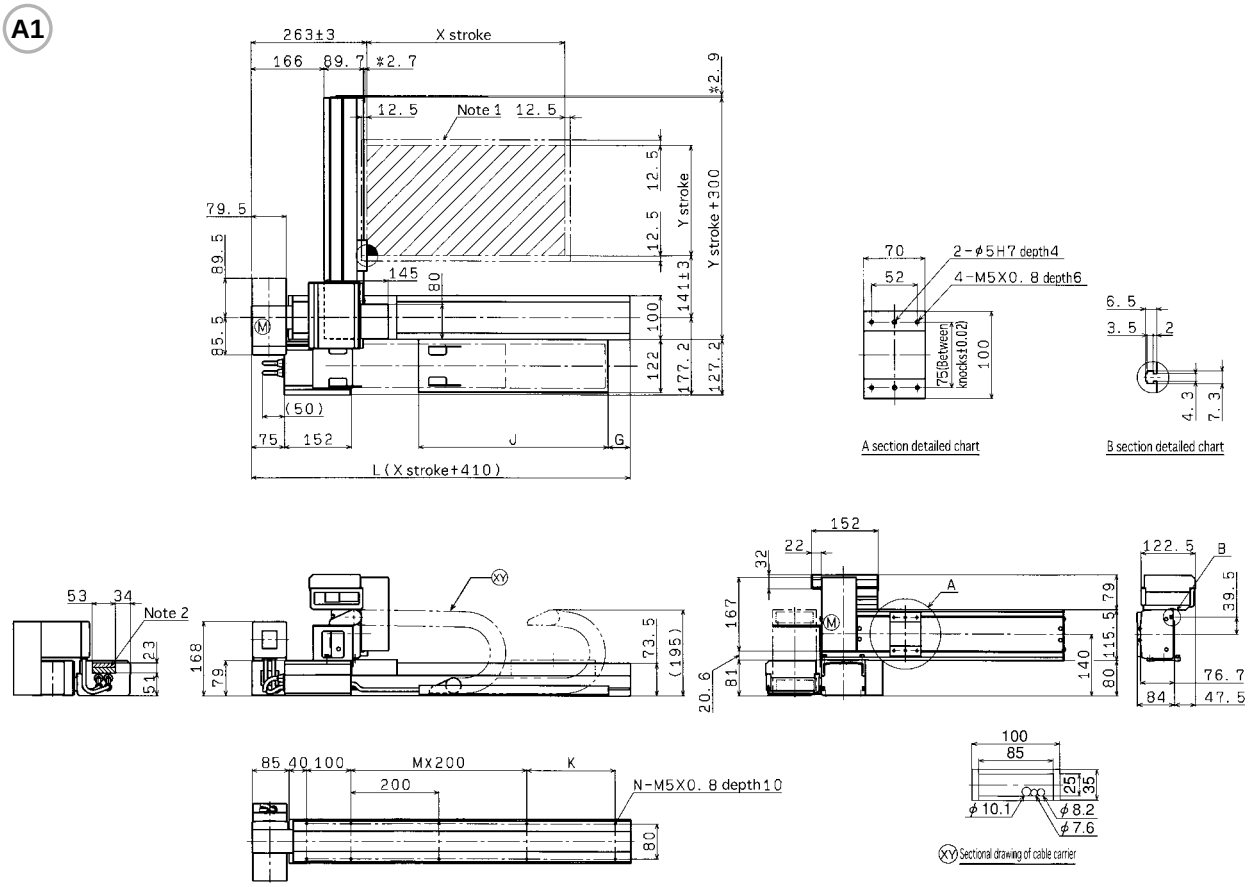

Note 1 : The moving range when returning to origin and the stop position when stopping by the mechanical stopper. Note 2 : Theshaded position indicates the port where the user cable is taken out. Note 3 : The dimension marked with an asterisk (*) indicates the height of the screw.

X stroke	150	250	350	450	550	650	750	850	950	1050	1150	1250	1350	1450	1550	1650	1750	1850	1950	2050	2150	2250	2350	2450
L	560	660	760	860	960	1060	1160	1260	1360	1460	1560	1660	1760	1860	1960	2060	2160	2260	2360	2460	2560	2660	2760	2860
K	100	200	100	200	100	200	100	200	100	200	100	200	100	200	100	200	100	200	100	200	100	200	100	200
M	1	1	2	2	3	3	4	4	5	5	6	6	7	7	8	8	9	9	10	10	11	11	12	12
N	8	8	10	10	12	12	14	14	16	16	18	18	20	20	22	22	24	24	26	26	28	28	30	30
G	0	50	0	50	0	50	0	50	0	50	0	50	0	50	0	50	0	50	0	50	0	50	0	50
J	330	330	430	430	530	530	630	630	730	730	830	830	930	930	1030	1030	1130	1130	1230	1230	1330	1330	1430	1430

Y stroke	150	250	350	450	550

A2

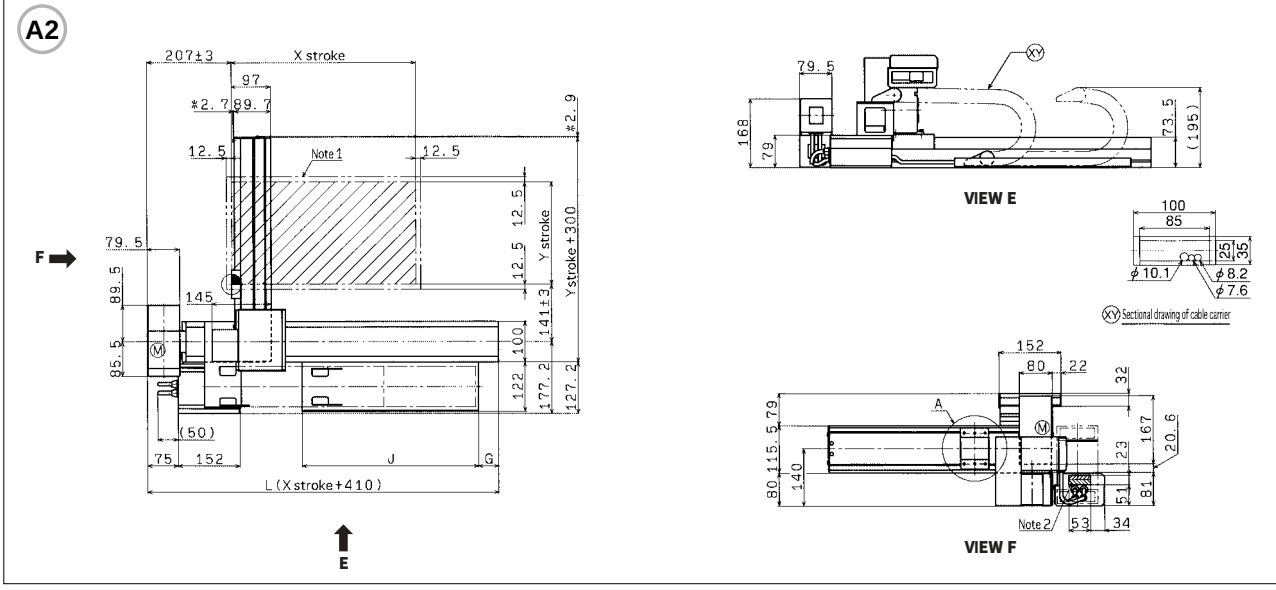
207±3
X stroke
97
*2.7
89.7
*2.9
12.5
Note1
12.5
Y stroke
Ystroke+300
79.5
F
89.5
145
85.5
141±3
100
122
177.2
127.2
(50)
75
152
J
G
L(Xstroke+410)
E
79.5
168
79
73.5
(195)
VIEW E
100
85
25
35
φ10.1
φ8.2
φ7.6
Sectional drawing of cable carrier
152
80
22
32
A
167
20.6
23
51
81
115.5
79
80
140
Note2
53
34
VIEW F

A3

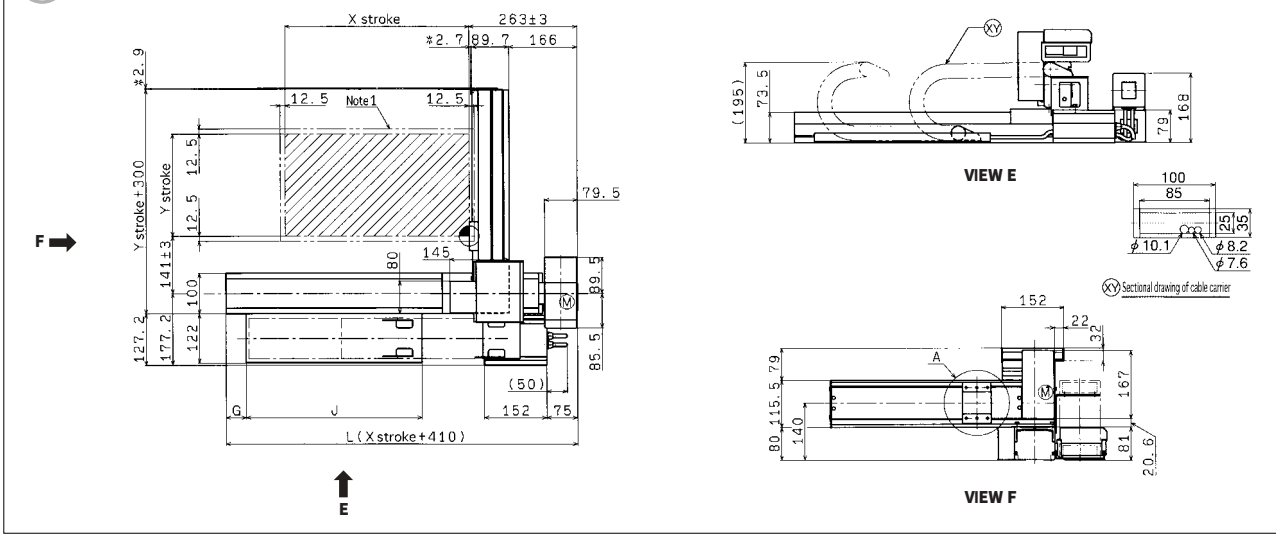
X stroke
263±3
*2.7
89.7
166
*2.9
12.5
Note1
12.5
Y stroke
Ystroke+300
79.5
F
141±3
145
80
100
89.5
127.2
177.2
122
85.5
(50)
G
J
152
75
L(Xstroke+410)
E
(195)
73.5
168
79
VIEW E
100
85
25
35
φ10.1
φ8.2
φ7.6
Sectional drawing of cable carrier
152
22
32
A
167
20.6
81
115.5
79
80
140
VIEW F

A4

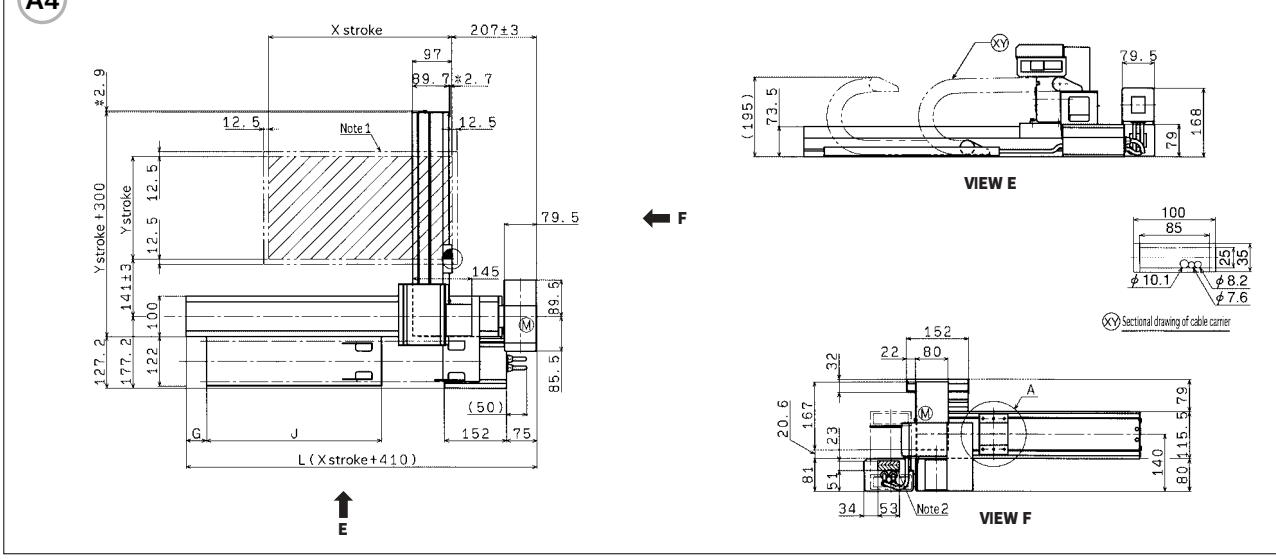
X stroke
207±3
97
89.7
*2.7
*2.9
12.5
Note1
12.5
Ystroke
Ystroke+300
79.5
F
141±3
145
100
89.5
127.2
177.2
122
85.5
(50)
G
J
152
75
L(Xstroke+410)
E
(195)
73.5
79.5
168
79
VIEW E
100
85
25
35
φ10.1
φ8.2
φ7.6
Sectional drawing of cable carrier
152
22
80
32
A
20.6
167
23
81
51
115.5
79
140
80
34
53
Note2
VIEW F